Class X Science
CBSE-2019

Time: 3Hr
Maximum Marks: 80

General Instructions:

I. *The question paper comprises five sections**. A. B. C. D and E.** You have to attempt all the sections.*
II. *All questions are compulsory.*
III. *Internal choice is given in **sections B, C, D and E.***
IV. *Question numbers **1 and 2 in Section A** are one mark questions. They are to be answered in one word or in one sentence.*
V. *Question numbers **3 to 5 in Section B** are two-marks questions. These are to be answered in about 30 words each.*
VI. *Question numbers **6 to 15 in Section** C are three-marks questions. These are to be answered in about 50 words each.*
VII. *Question numbers **16 to 21 in Section D** are five-marks questions. These are to be answered in about 70 words each.*
VIII. *Question numbers **22 to 27 in Section E** are based on practical skills. Each question is a two marks question. These are to be answered in brief.*

Section A

1. If you could use any source of energy for heating your food which one would you prefer? State one reason for your choice.

ANSWER: If I could use any source of energy for heating food then I would prefer solar energy because:
1)It is available in abundance
2)Energy from Sun is available to every individual
3)Solar energy also preserves the natural nutrients of food by cooking it slowly at low temperature.
4)It is economical.

2. Write the function of voltmeter in an electric circuit.

ANSWER: The function of the voltmeter in a circuit is to measure the voltage drop across any appliance. The voltmeter is always connected parallel in the circuit.

3. What happens to the image distance in the normal human eye when we decrease the distance of an object, say 10 m to 1 m ? Justify your answer.

ANSWER: If the object distance is greater than 25 cm the image is always formed on the retina as the focal length of the human eye lens gets adjusted depending on the object distance. This special property of human eye is called as power of accommodation. Hence, image distance will remain same if object distance changes from 10 m to 1 m.

4. List two different functions performed by pancreas in our body.

ANSWER: The pancreas contains both the endocrine and exocrine portions. The exocrine region secretes sodium bicarbonate and many digestive enzymes. The pancreatic amylase causes breakdown of starch, pancreatic lipase causes breakdown of lipids, and trypsin causes digestion of proteins The endocrine regions secrete hormones i.e. insulin and glucagon. These hormones regulate the level of glucose in the blood. Insulin decreases while glucagon increases the blood glucose level.

5. How it can be proved that the basic structure of the Modern Periodic Table is based on the electronic configuration of atoms of different elements?
OR
The electronic configuration of an element is 2, 8, 4. State its:
(a) group and period in the Modern Periodic Table.
(b) name and write its one physical property.

ANSWER: Modern periodic law states that the physical and chemical properties of an element in the periodic table are the periodic function of the atomic number of that element. Electronic configuration of the elements plays an important role in the placement of elements in the modern periodic table. The valence shell electron of an element decides its position in a particular group or period. For example, if the electronic configuration of an element is 2, 1, it means that the element belongs to group I and 2nd period (valence electron is present in the 2nd shell). Similarly, if the electronic configuration of an element is 2, 8, 1, it means that the element belongs to group I and 3rd period (valence electron is present in the 3rd shell).
Thus, the modern periodic table is based on the electronic configuration of the different elements.
OR
(a) The electronic configuration of the given element is 2,8,4. Since, the number of valence electrons for the given element is 4. Hence, the element belongs to group 14 (10+4) and the 3rd period.
(b) The atomic number of the given element is 14. Hence, the given element is Silicon. Silicon is a metalloid.

6. How can we help in reducing the problem of waste disposal? Suggest any three methods.
OR

Define an ecosystem. Draw a block diagram to show the flow of energy in an ecosystem.

ANSWER: The three methods we can utilise for reducing the problem of waste disposal are:
Segregation of waste into biodegradable and non-biodegradable
Following the principle of 3R- reduce, reuse and recycle Converting biodegradable waste into useful commodities like energy from biogas, using the compost as fertiliser OR
Ecosystem refers to the living and non-living components in an area and the interactions between them. Energy flows across the trophic levels as shown in the diagram below, following the ten percent law. Only ten percent of the energy available to a trophic level is passed on to the next trophic level. The remaining is dissipated away.

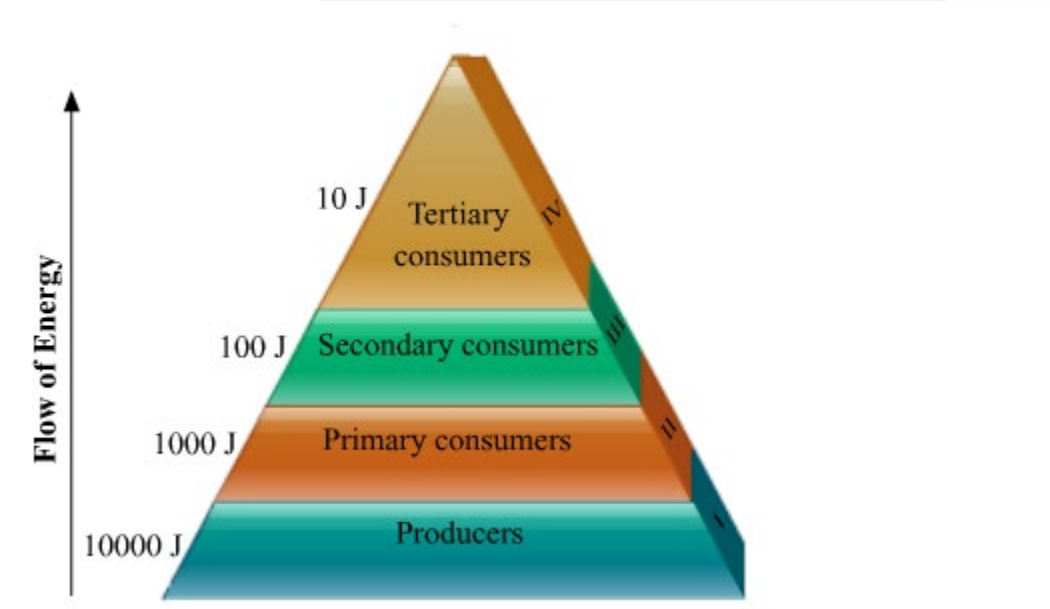

Assuming 10000 J is the energy available to the producers, then 1000 J will be available to the primary consumers, 100 J will be available to secondary consumers and 10 J will be available to tertiary consumers.

7. List three advantages each of:
(i) exploiting resources with short term aims, and
(ii) using a long term perspective in managing our natural resources.

ANSWER: (i) Advantages of exploiting resources with short term aims:

(i) The current basic needs of the population can easily be fulfilled.
(ii) Fast industrialisation.
(iii) Variety of useful products can be made to make life easy.

(ii) Advantages of long term perspective in managing our natural resources:

(i) Sustainable management of resources
(ii) The resources can be used efficiently by the present as well as future generations.
(iii) The pollution and the degradation of the environment can be reduced.

8. What is a rainbow? Draw a labelled diagram to show the formation of a rainbow.

ANSWER: The rainbow is a natural phenomenon in which white sunlight splits into beautiful colours by water droplets, which remain suspended in air after the rain. Formation of a rainbow:

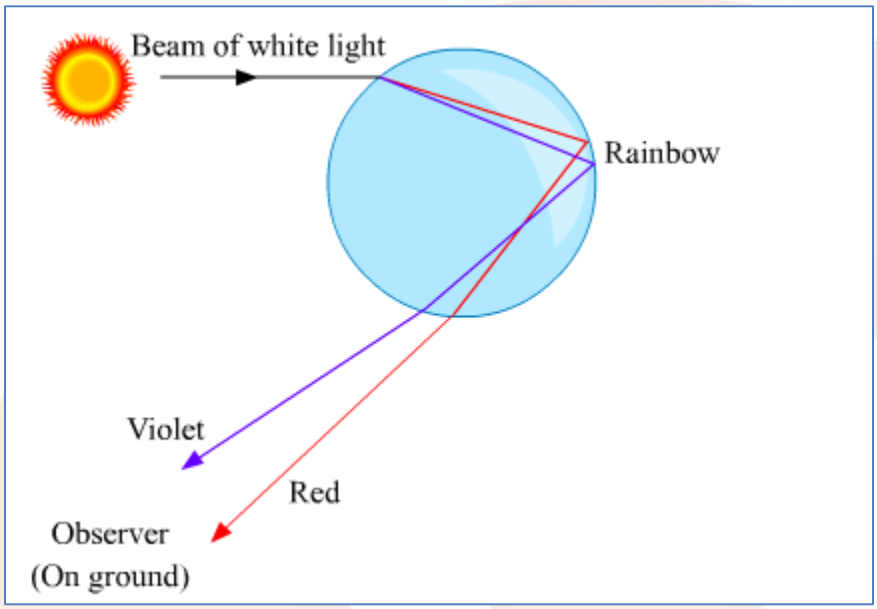

9. Nervous and hormonal systems together perform the function of control and coordination in human beings. Justify this statement with the help of an example.

ANSWER: In human beings, control and coordination is brought about by both nervous system and endocrine system. Nervous system works by generation and transmission of electrical impulse while the endocrine system works by secreting chemical messengers called hormones. These systems complement the action of each other to control and coordinate different functions in our body. For example, when an emergency stimulus is detected by the nervous system, the stimulus is received and analysed by CNS that send message to effectors to provide proper response. At the same time, the sympathetic nervous system activates adrenal gland to release adrenaline that prepares body by increasing heart rate, blood pressure, respiration and dilates pupil etc. Thus, both these systems interact and work together to produce an effective response.

10. Trace the sequence of events which occur when a bright light is focused on your eyes.

ANSWER: When bright light is focussed on our eyes, then it goes to the brain, the brain reverts back the message by motor neuron which contracts the pupil. The sequence of events which occur is:

$$Receptor \rightarrow Sensory\ neuron \rightarrow Brain \rightarrow Motor\ Neuron \rightarrow Eye \rightarrow Eye\ muscle\ contracts$$

11. What is photosynthesis? Explain its mechanism.

ANSWER: Photosynthesis is a process in which the energy of light is utilised to produce simple organic compounds in autotrophs. In the process of photosynthesis the energy of sunlight is captured by photosensitive pigment like chlorophyll in green plants. The energy harnessed by light is utilised for photolysis of water molecules within the chloroplasts of green plants. As a result nascent oxygen is released as molecular oxygen gas. Hydrogen released by the reduction of water is further utilised by the plants in light independent reaction where carbon dioxide is reduced to simple carbohydrates or sugars in a series of metabolic reactions within the plant chloroplasts.
The detailed equation of photosynthesis can be represented as:human

$$6CO_2 + 12H_20 \rightarrow C_6H_{12}0_6 + 60_2 + 6H_20$$

12. Name the plant Mendel used for his experiment. What type of progeny was obtained by Mendel in F1 and F2 generations when he crossed the tall and short plants? Write the ratio he obtained in F2 generation plants.

OR

List two differences between acquired traits and inherited traits by giving an example of each.

ANSWER: Mendel used pea plant (Pisum sativum) for his experiments. When Mendel crossed tall and short plants, the progeny obtained in Fl generation were tall. When the Fl plants were selfed, the F2 generation showed three tall and one dwarf plant. The genotypic ratio of F2 generation is 1:2:1 (TT : Tt: Tt: tt) and the phenotypic ratio is 3:1 (Tall: Dwarf).

Parents: TT × tt

Gametes: (Tall) (Drawf)

F_1

Tt

(Tall)

Selfing of F_1: TT × tt

(Tall) (Drawf)

T t T t

F_2

	T	t
T	TT	Tt
t	Tt	tt

Result: TT and Tt = Tall

tt = Dwarf

OR

Differences between Acquired Traits and Inherited Traits

Acquired Traits	Inherited Traits
i. These are somatic variations.	i. These are genetic variations.
ii. Acquired traits develop due to the effects of environmental factors, use and disguise of organs and special (conscious) efforts.	ii. Inherited traits develop due to a reshuffling of genetic material and mutations.
iii. These traits develop throughout the lifetime of an individual.	iii. These traits are transferred (inherited) by the parents to their offspring.
iv. Example-Learning of dance, music, etc. and muscular body of a wrestler.	iv. Example-Attached or free earlobe and curly hair.

13. 2 g of silver chloride is taken in a china dish and the china dish is placed in sunlight for sometime. What will be your observation in this case? Write the chemical reaction involved in the form of a balanced chemical equation. Identify the type of chemical reaction.

OR

Identify the type of reactions taking place in each of the following cases and write the balanced chemical equation for the reactions.
(a) Zinc reacts with silver nitrate to produce zinc nitrate and silver.
(b) Potassium iodide reacts with lead nitrate to produce potassium nitrate and lead iodide.

ANSWER: When 2 g of silver chloride, AgCI, is kept in sunlight then AgCI breaks down into Ag and C12. The color of the silver chloride turns to grey. The following change can be represented by the chemical reactions as:
sunlight 2AgCl(s) 2Ag(s) + Cl2(g) . This type of reaction is an example of a photochemical decomposition reaction.

(a) The given reaction is a displacement reaction in which more reactive zinc will displace less reactive silver from silver nitra Answer. Zn(s) + 2AgNO3(aq) -+Zn(NO3)2(aq) + 2Ag(s)
(b) The given reaction is a double displacement reaction. 2KI(aq) + Pb(NO3)2(aq) 2KNO3(aq) + Pb12(s)

14. Based on the group valency of elements write the molecular formula of the following compounds giving justification for each:
Oxide of first group elements.
Halide of the elements of group thirteen, and Compound formed when an element A of group 2 combines with an element B of group seventeen.

ANSWER: Oxides of the first group elements have the common formula of M20.
Example- Na20, K20. This is because, the first group elements have a common valency of 1, and the valency of Oxygen is 2 so, to satisfy the combining capacity of Oxygen two 1st group metals are required.

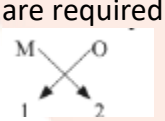

Halides of group 13 elements have a common formula of MX3 , where M-metal and X- halogen element. Example- AICl3, BF3 . This is because the valency of group 13 elements is 3 and that of halogens is 1 so, to satisfy the combining capacity of aluminum or other group 13th elements three of halogens are required in the molecular formula.

The general formula for those kinds of compounds would be AB2
Example- MgCl2, CaCl2. This is because the valency of group 2 elements is 2 and that of group 17th elements if 1 so to satisfy the combining capacity of group 2 elements two of group 17 elements are required in the molecular formula.

15. Explain the following:

(a) Sodium chloride is an ionic compound which does not conduct electricity in solid state where as it does conduct electricity in molten state as well as in aqueous solution.

(b) Reactivity of aluminium decrease if it is dipped in nitric acid.

(c) Metals like calcium and magnesium are never found in their free state in nature.

ANSWER: (a) NaCI conducts electricity in the molten state and in aqueous Answers because ions are free to move whereas in solid state ions are not free to move.

(b) When aluminium is dipped in nitric acid a layer of aluminium oxide is formed on the metal. This happens because nitric acid is a strong oxidizing agent. The layer of aluminium oxide prevents further reaction of aluminium. Due to this, the reactivity of aluminium decreases.

(c) Because Calcium and Magnesium are highly reactive.

16. (a) With the help of a suitable circuit diagram prove that the reciprocal of the equivalent resistance of a group of resistances joined in parallel is equal to the sum of the reciprocals of the individual resistances.
(b) In an electric circuit, two resistors of 12 0 each are joined in parallel to a 6 V battery. Find the current drawn from the battery.

OR

An electric lamp of resistance 20 0 and a conductor of resistance 4 0 are connected to a 6 V battery as shown in the circuit. Calculate:

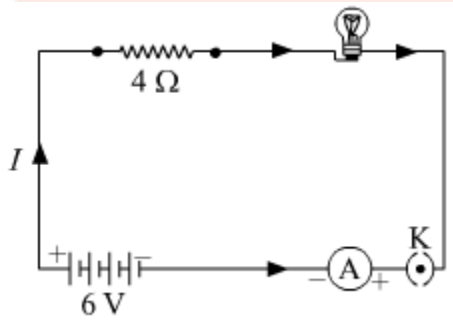

(a) the total resistance of the circuit,
(b) the current through the circuit,

(c) the potential difference across the
(i) electric lamp and (ii) conductor, and
(d) power of the lamp.
ANSWER: (a)

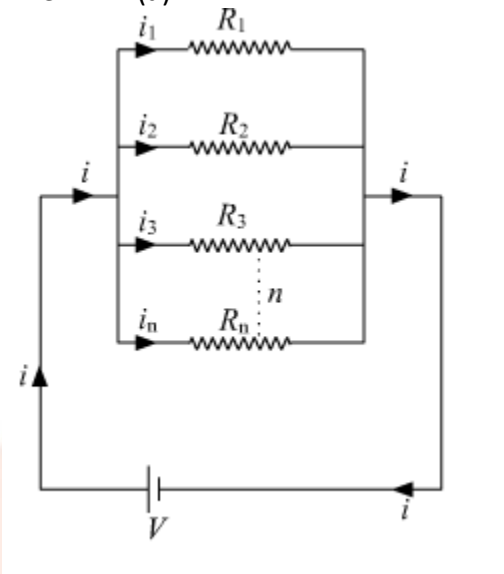

Let there are n resistances, each of value RI, R2 Rn, respectively, are connected in parallel to a battery of voltage V. if the equivalent resistance of the circuit is Req, then current drawn from the battery is $i = \frac{V}{R_{eq}}$

The total current /then divides into Ii, iz, i3 in, respectively in the given resistors. As all the resistances are connected in parallel, hence the voltage across each resistor is Vvolt. Now we can write,

$$i = i_1 + i_2 + i_3 + ... + i_{eq}$$

$$\frac{V}{R_{eq}} = \frac{V}{R_1} + \frac{V}{R_2} + \frac{V}{R_3} .... + \frac{V}{R_n} \quad .....(1)$$

From eq. 1,

$$\frac{1}{R_{eq}} = \frac{1}{R_1} + \frac{1}{R_2} + \frac{1}{R_3} .... + \frac{1}{R_n}$$

Hence, reciprocal of the equivalent resistance is equal to the sum of reciprocal of each resistor joined in parallel (b) Let net resistance of the given parallel combination be Root, Then

$$\frac{1}{R_{\text{net}}} = \frac{1}{12} + \frac{1}{12}$$

$$\frac{1}{R_{\text{net}}} = \frac{2}{12} = \frac{1}{6}$$

$$\Rightarrow R_{\text{net}} = 6\ \Omega$$

Hence, current, $i = \frac{V}{R_{net}} = \frac{6\,\text{V}}{6\,\Omega} = 1\,\text{A}$

OR

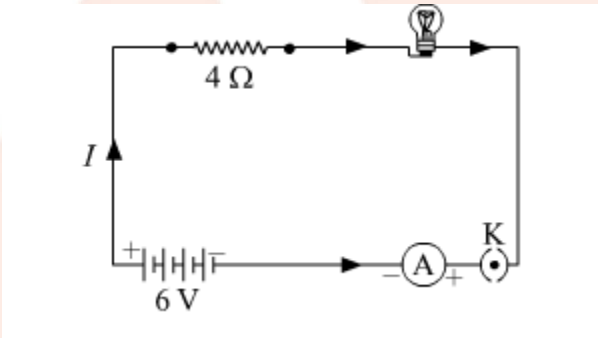

Resistance of electric lamp = $20\,\Omega$

Resistance of conductor= $4\,\Omega$

Voltage battery= 6V

Apply Ohms law

$$V = IR$$

$$6\ \text{V} = I \times 24\ \Omega$$

$$I = \frac{6\ V}{24\ \Omega} = 0.25\ \text{A}$$

Hence, current in the circuit is 0.25A

(c)

Potential difference across the loop

$$V_{\text{lamp}} = IR$$

$$V_{\text{lamp}} = 0.25\ \text{A} \times 20\ \Omega = 5\ \text{V}$$

$$\therefore V_{\text{lamp}} = 5\ \text{V}$$

Potential difference across the conductor

$V_{\text{Conductor}} = IR$

$V_{\text{Conductor}} = 0.25\,\text{A} \times 4\,\Omega = 1\ \text{V}$

$\therefore V_{\text{Conductor}} = 1\,\text{V}$

Power of lamp $I^2R = (0.25)^2 \times 20 = 1.25\,\text{W}$

17. (a) Draw magnetic field lines produced around a current carrying straight conductor passing through cardboard. Name, state and apply the rule to mark the direction of these field lines.
(b) How will the strength of the magnetic field change when the point where magnetic field is to be determined is moved away from the straight wire carrying constant current? Justify your answer.
ANSWER:

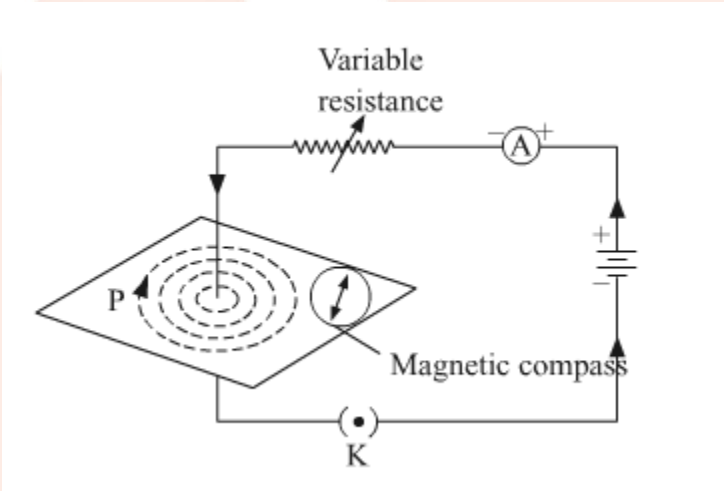

(a) To mark the direction of magnetic field lines, we will use The Right hand thumb rule. The right-hand thumb rule is used to find the direction of the magnetic field lines, according to this rule if we place our right-hand thumb along the direction of the current flowing in a current carrying wire, the direction in which the fingers wrap the wire represents the direction of the magnetic field. As we can see in the given figure, where the current is going downward, the direction of magnetic field lines is clockwise, according to the rule.

(b) Using a compass needle we can determine the magnetic field. When we move away from the compass needle from the straight wire, the deflection of the needle decreases which implies the strength of the magnetic field decreases, as the strength of magnetic field produced by a straight wire at any point is inversely proportional to the distance of the point from the wire.

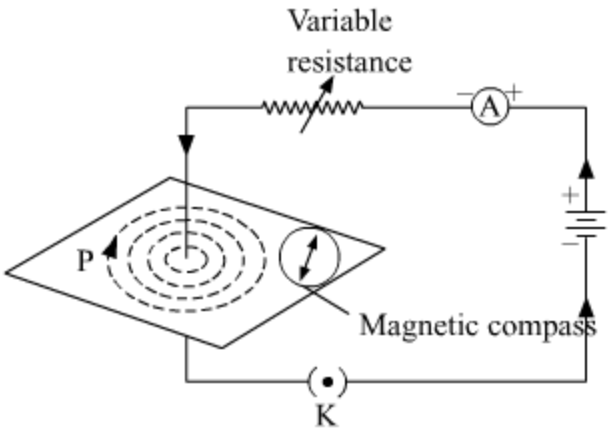

18. An object is placed at a distance of 60 cm from a concave lens of focal length 30 cm.
(i) Use lens formula to find the distance of the image from the lens.
(ii) List four characteristics of the image (nature, position, size, erect/inverted) formed by the lens in this case.
(iii) Draw ray diagram to justify your answer of part (ii).

ANSWER: We have, (i) Object distance, u= —60 cm Focal length of the concave lens, f= —30 cm
Using lens formula,

$$\frac{1}{v}-\frac{1}{u}=\frac{1}{f}$$

$$\frac{1}{v}-\frac{1}{(-60)}=\frac{1}{(-30)}$$

$$\frac{1}{v}=\frac{-1}{30}-\frac{1}{60}$$

$$\frac{1}{v}=\frac{-3}{60}$$

$$v=-20\ cm$$

The image will be formed at a distance of 20 cm in front of the lens.
(ii) Nature of the image is virtual. The position of the image is between F1 and optical center 0. Size of the image is diminished. The image is Erect.

(iii)

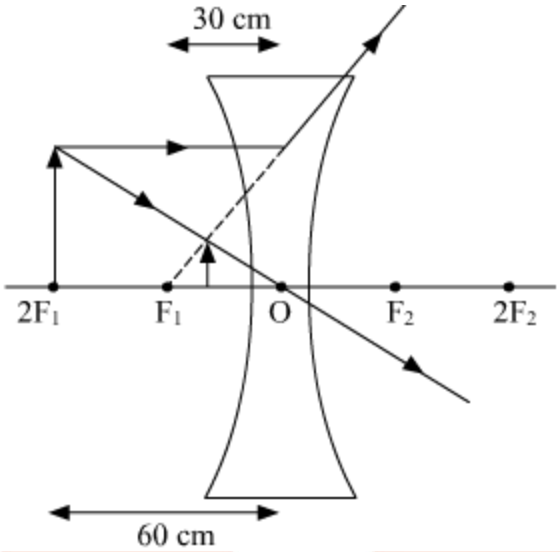

19. Define pollination. Explain the different types of pollination. List two agents of pollination? How does suitable pollination lead to fertilization?

OR

Identify the given diagram. Name the parts 1 to 5.

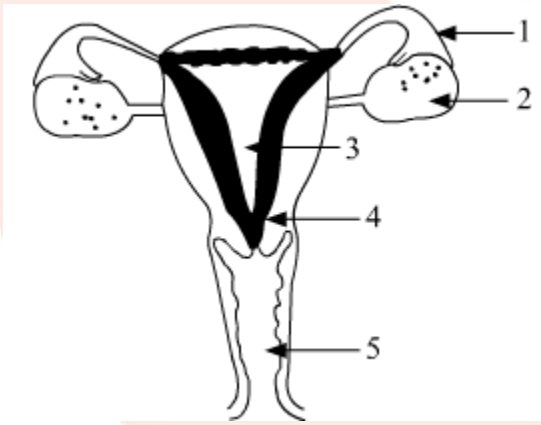

What is contraception? List three advantage of adopting contraceptive measures.

ANSWER: Transfer of pollen grain from the anther of a flower to stigma is termed as pollination.
Based on the transfer of pollen grains between plants, pollination can be of two types:
1) Self Pollination: When pollen of a plant is transferred to the stigma of a flower on the same parent plant then it is termed as self-pollination.
2) Cross Pollination: When pollen of a plant is transferred to the stigma of a flower of a plant different from the one from which pollen is obtained then it is termed as cross-pollination.

Some of the most common agents of pollination that helps in carrying the pollen from the anther to the stigma of a flower are insects and wind.
As the pollen of the right type is deposited on to the stigma of the flower of the same species, quite often it leads to germination of pollen grain as a result of a chemical cross-talk between the pollen and the carpel. Germination leads to the growth and extension of the pollen tube through the style of the flower to its ovary. The pollen tube carries the male gametes all the way to the ovule inside the ovary, leading to fertilisation of male gamete with the female gamete inside the ovule.

OR

(a) The labelled parts of the female reproductive system are as follows:

1 - Oviduct or Fallopian Tube 2 - Ovary 3 - Uterus 4 - Cervix 5 - Vagina
(b) Contraception includes methods or ways to prevent fertilisation and pregnancy in a fertile female as a result of successful copulation between a fertile male and female.
Some of the major advantages of adopting various contraceptive methods include:

(i) Prevention of unwanted pregnancies
(ii) Help in family planning and population control
(iii) Some contraceptive devices like condoms and female diaphragm prevent spread of STDs like AIDS and Hepatitis B.

20. Write the chemical formula and name of the compound which is the active ingredient of all alcoholic drinks. List its two uses.
Write chemical equation and name of the product formed when this compound reacts with-
(i) Sodium metal
(ii) hot concentrated sulphuric acid

OR

What is methane? Draw its electron dot structure. Name the type of bonds formed in this compound. Why are such compounds:
(i) poor conductors of electricity? and
(ii) have low melting and boiling points? What happens when this compound burns in oxygen?

ANSWER: Name of the compound which is the active ingredient of all alcoholic drinks is Ethanol, and its chemical formula is CH3CH2OH. Uses- (i) Ethanol is used in medical wipes/swabs and antibacterial hand sanitizers. (ii) Ethanol is also used in body lotions as preservatives and stabilizer of its ingredients.
Chemical reactions of ethanol-

$$CH_3CH_2OH + Na \rightarrow CH_3CH_2O^- Na^+ + H_2$$

$$CH_3CH_2OH + H_2SO_4 \rightarrow C_2H_4 + H_20$$

OR

Methane is a colourless, odourless and highly flammable gas which is the main component of natural gas. It is also called as marsh gas as it is produced when vegetation decomposes naturally in any swampy or marshlands.

The type of bonds present in methane are all covalent bonds between four hydrogen atoms and the single carbon atom at the center of the molecule.
(i) Methane is a poor conductor of electricity because in methane all bonds are covalent bonds and therefore no free electrons are present in the molecule that can help in the conduction of electricity.
(ii) Covalent compounds have low intermolecular forces of attraction between the molecules and thus show low melting and boiling points. Since, methane is also a covalent compound thus methane has very low melting and low boiling point. When methane is burned in the presence of Oxygen it forms Carbon dioxide gas and water as a product of the reaction.

$$CH_4 + O_2 \rightarrow CO_2 + H_2O$$

Methane Water Carbon dioxide Water

21. Write the main difference between an acid and a base. With the help of suitable examples explain the term neutralization and the formation of –
(i) acidic,
(ii) basic and
(iii) neutral salts

ANSWER:

Acid	Base
1. Turns blue litmus red	1. Turns red litmus blue
2. Sour in taste	2. Bitter in taste
3. Release H+ ion in water3.	Release OH- ion in water
4. pH is less than 7	4. pH is more than 7
5. Example: HCl	5. Example: NaOH

Neutralization is a type of chemical reaction in which an acid and base react to form salt and water with evolution of heat. i) When neutralisation of a strong acid with a weak base takes place, it leads to the formation of acidic salt. Example

$$HCl + NH_4OH \rightarrow NH_4Cl + \mathrm{H_2O}$$
$$NaOH + CH_3COOH \rightarrow CH_3COO^- Na^+ + \mathrm{H_2O}$$
$$NaOH + HCl \rightarrow NaCl + \mathrm{H_2O}$$

22. In the experimental set up to show that "CO2 is given out during respiration", name the substance taken in the small test tube kept in the conical flask. State its function and the consequence of its use.

ANSWER: In the above mentioned experimental setup, lime water is taken in a small test tube which is kept in the conical flask. Lime water is used to detect the presence of carbon dioxide. When carbon dioxide passes through lime water, it turns milky due to the formation of calcium carbonate. Hence, it is used in the above experiment to check whether CO2 is released during respiration.

23. A student is observing the temporary mount of a leaf peel under a microscope. Draw labelled diagram of the structure of stomata as seen under the microscope

OR

Draw a labelled diagram in proper sequence to show budding in hydra.

ANSWER: Structure of stomata

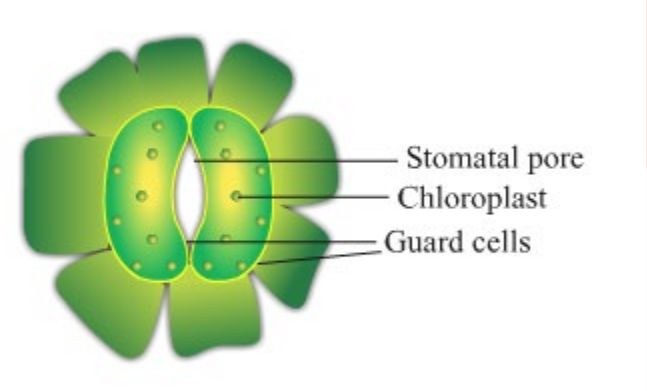

OR

Budding of hydra

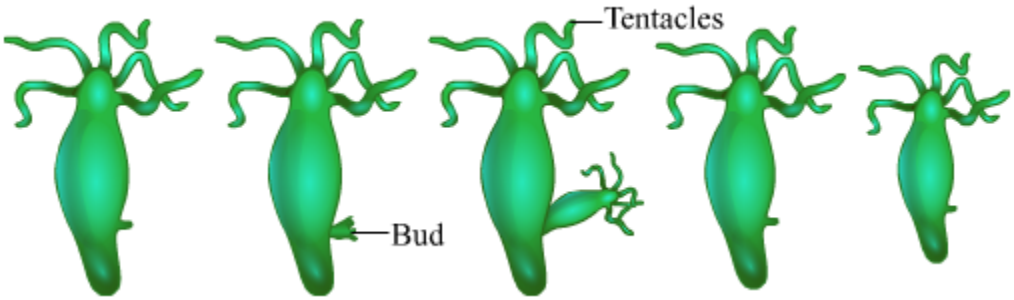

24. List four precautions which a student should observe while determining the focal length of a given convex lens by obtaining image of a distant object on a screen.

ANSWER: Following are the precautions while making the image by the help of convex lens: 1.) Fix the convex lens vertically in the lens holder.
2.) The base of the lens and white screen should be in a line with the measuring scale.
3.) Record the position of the lens and screen only when a well-defined sharp image is formed.
4.) There should not be any obstacle in the path of the convex lens.

25. While studying the dependence of potential difference (V) across a resistor on the current (I) passing through it, in order to determine the resistance of the resistor, a student took 5 readings for different values of current and plotted a graph between V and t. He got a straight line graph passing through the origin. What does the straight line signify? Write the method of determining the resistance of the resister using this graph.

OR

What would you suggest to a student if while performing an experiment he finds that the pointer/needle of the ammeter and voltmeter do not coincide with the zero marks on the scales when the circuit is open? No extra ammeter/voltmeter is available in the laboratory.
ANSWER:

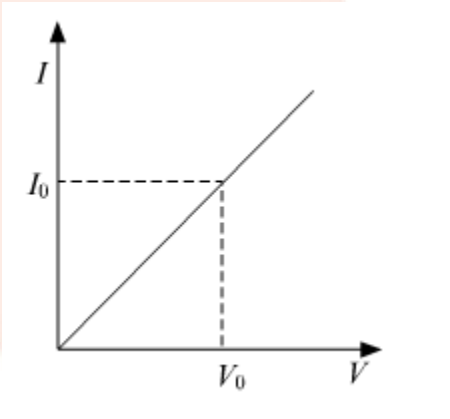

Straight line graph between potential difference (V) and current(I) shows that resistor is a linear element and follows Ohm's Law.
Calculation of Resistance: At any point on the graph, resistance is given as,

$$R = \frac{V_o(\text{value of potential difference at that point})}{I_o(\text{value of current at that point})}$$

In other words, the Slope of the graph at any point gives the value $\frac{1}{R}$
Hence,

$$\text{slope} = \frac{I_o}{V_o} = \frac{1}{R}$$

$$\Rightarrow R = \frac{1}{slope} = \frac{V_o(\text{Value of Potential difference at that point})}{I_o(\text{Value of Current at that point})}$$

OR

This is called the zero error of the scale of ammeter or voltmeter. If there is a zero error, then this error is subtracted from the value that depicts when the circuit is closed, otherwise, the accurate current or potential difference will not be recorded.

26. In three test tubes A, B, and C, three different liquids namely, distilled water, underground water and distilled water in which a pinch of calcium sulphate is dissolved, respectively are taken. Equal amount of soap Answer is added to each test tube and the contents are shaken. In which test tube will the length of the foam (lather) be longest? Justify your answer.

ANSWER:

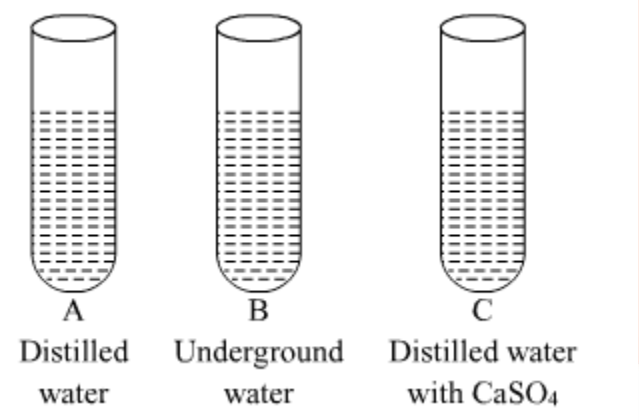

Test tube A contains distilled water which is considered as soft water, free from ions like Mg2÷, Ca2+, etc. So, in this case, the length of foam will be the longest(maximum). Test tube B contains underground water which contains ions like Mg2+, Ca2÷, etc. which react with soaps to form salts of fatty acids called scum, which are insoluble in water. So, in this case, the length of foam will be the less in comparison to test tube A. Test tube C contains distilled water with CaSO4, which contains Ca2÷ ions which react with soaps to form salts of fatty acids called scum, which are insoluble in water. So, in this case also, the length of foam will be the less in comparison to test tube A.

27. Blue litmus is added to two test tubes A and B containing dilute HCl and NaOH. Answer respectively. In which test tube a colour change will be observed? State the colour change and give its reason.

OR

What is observed when 2 mL of dilute hydrochloric acid is added to 1 g of sodium carbonate taken in a clean and dry test tube? Write chemical equation for the reaction involved.

ANSWER: Test tube A contains dil. HCl and test tube B contains dil. NaOH. On adding blue litmus Answer to both the test tubes, the colour of the test tube A will change from blue to red. This is because HCl is an acid and acids turn blue litmus to red.

OR

On adding dilute hydrochloric acid to sodium carbonate taken in a clean and dry test tube, a brisk effervescence will be observed due to the evolution of carbon dioxide gas.

$$2HCl + Na_2CO_3 \rightarrow 2NaCl + H_2O + CO_2$$